CryoTel® DS 30

32 W Cryocooler

Nominal Lift @ 77 (23°C Reject)	32 W
Nominal Input Power	480 W
Minimum temperature	35 K
Cooler Mass	6.4 kg
MTTF	120,000 hr goal
Temperature Stability	± 0.1 K
Power Supply	DC 48 V
Orientation	any
AVC Balancer Capable	yes
Added Length for AVC Balancer	+ 30 mm
Exported Force	TBD

The CryoTel® DS30 cryocooler will offer efficient, reliable and compact cooling to the market in the temperature range of 35 to 250 Kelvin. The DS30 was optimized for applications in which SWAP (size, weight and power) and reliability are concerns. The DS30 consumes considerably less power than other cooling alternatives and requires no maintenance, making it ideal for strategic as well as industrial applications.

SUNPOWER
AMETEK®

2005 E. State Street
Athens, Ohio 45701 USA
www.sunpowerinc.com

Efficient, reliable, and compact cryogenic cooling

CryoTel® DS 30

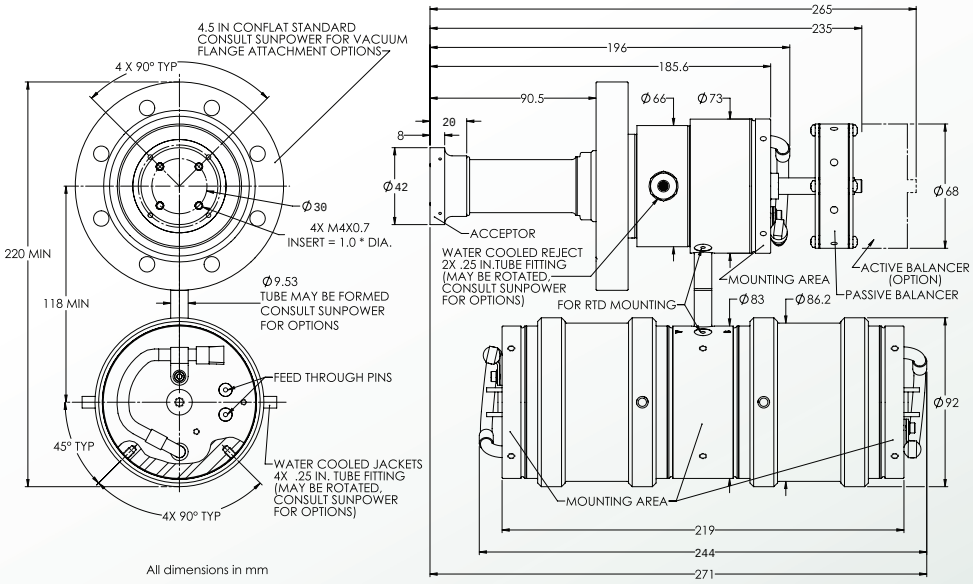

All dimensions in mm

Nominal Performance

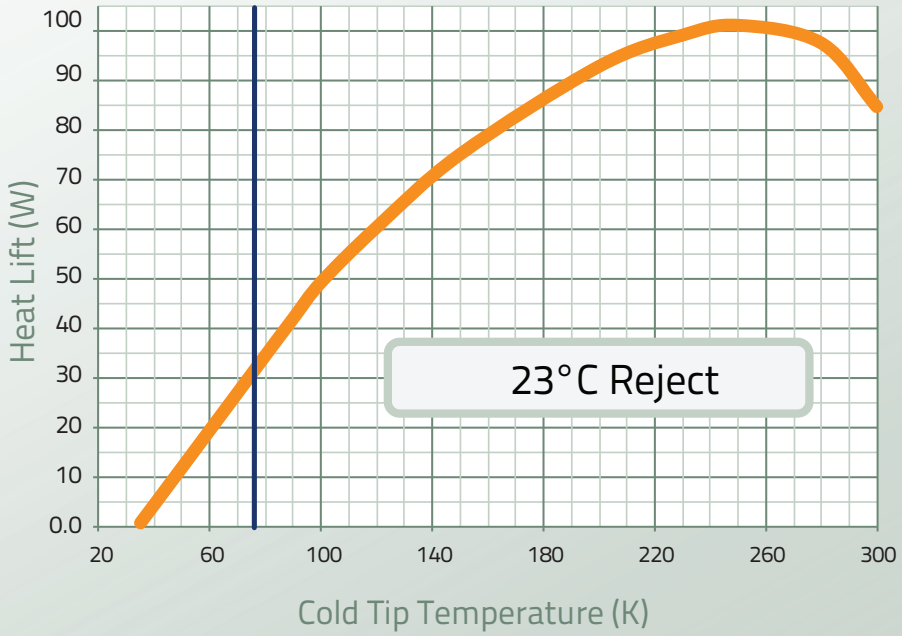

Data is subject to change.

Features of the DS30 include:

- Water-cooled cold head and wave generator for improved thermal efficiency
- Active Vibration Control (AVC) technology optionally available with an active balancer on the cold head and wave generator piston control to minimize exported vibrations
- Does not require an additional compressor or gas lines
- Maintenance-free operation
- Long life
- Durable
- Low input power needed compared to Gifford McMahon and mixed refrigerant technologies
- Three configurations available:
  - Inline: shown on front page
  - Parallel: shown on this page and front page
  - Cross: shown below

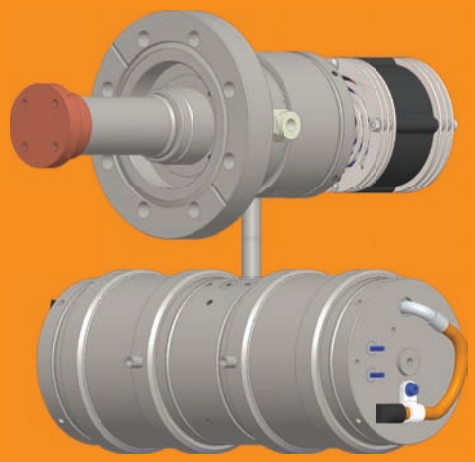

Please email sales@sunpowerinc.com for sales information.

SUNPOWER
AMETEK®

2005 E. State Street
Athens, Ohio 45701 USA
www.sunpowerinc.com

Efficient, reliable, and compact cryogenic cooling